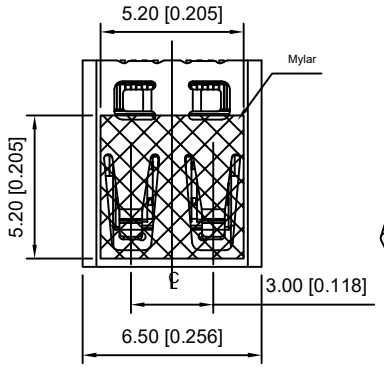

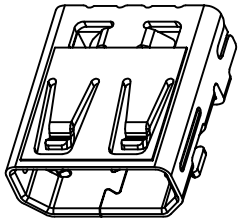

Notes:
1. Materials
   a. Housing: LCP+30% G/F, Black, UL94 V-0;
   b. Contact: Phosphor Copper (C5191), Gold Plating at mating area, Matte Tin or Au Plating at solder tail, all over Nickel;
   c. Shell: Phosphor Copper (C5191);
2. Ratings
   a. Current Rating: 0.3A ;
   b. Operating Temperature: -40°C ~ 85°C;
3. Electrical Requirement:
   a. LLCR: Excluding Conductor Resistance 10mΩ Max.(Target design value),
      Contact: 30mΩ Max. changed (Final), Shell: 50mΩ Max. Changed (Final);
   b. Dielectric Withstanding Voltage: 150V AC (RMS) for 1 minute (Mated), 250V AC (RMS) for 1 minute (Unmated);
   c. Insulation Resistance: 10MΩ Min. @ 150V DC (Mated), 100MΩ Min. @ 500V DC (Unmated);
54. Mechanical Performance:
   a. Insertion force: 44.1N (4.5Kgf) Max.;
   b. Withdrawal force: 4.9~25N (0.5~2.5Kgf);
   c. Durability life: 5,000 Cycles;
5. IR Reflow: the peak temperature on board shall be maintained for 10 seconds at 260±5°c.

A73-01H3-1X1N2

1:Au 1U"
5:Au 15U"
6:Au 30U"

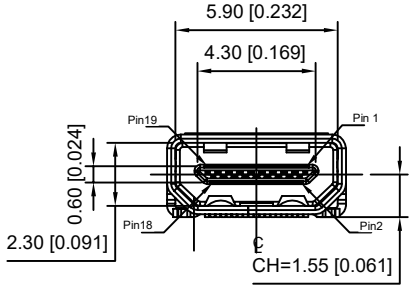

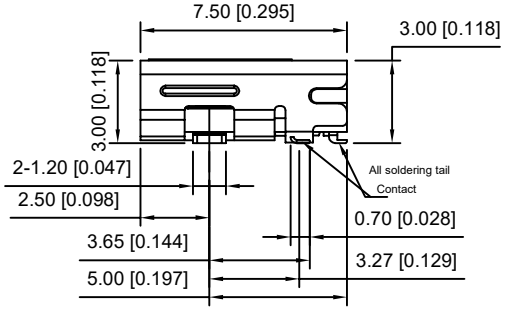

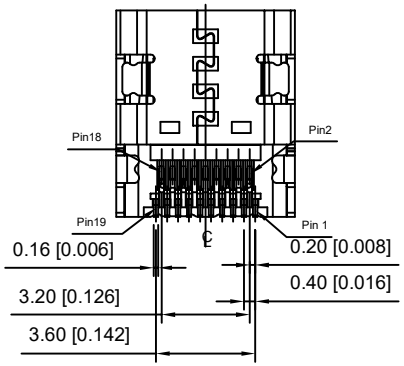

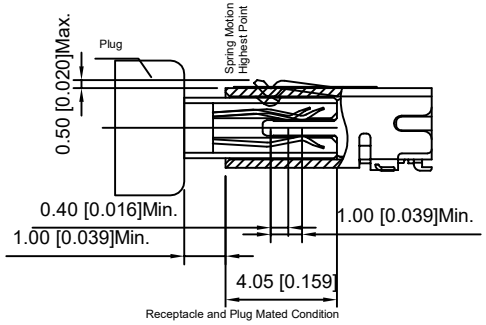

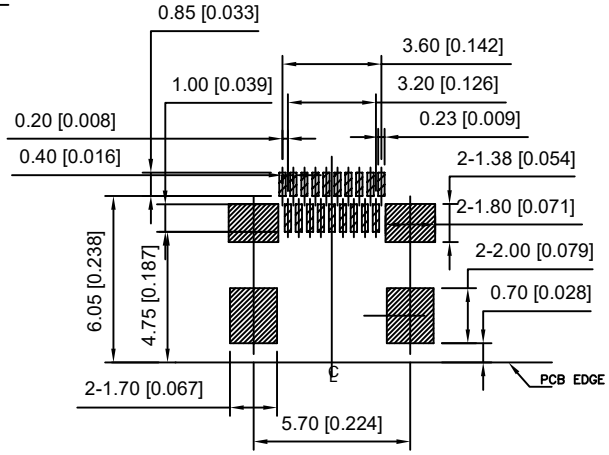

PIN	Signal Assignment
1	Hot Plug Detect
2	Utility
3	TMDS Data2+
4	TMDS Data2 Shield
5	TMDS Data2–
6	TMDS Data1+
7	TMDS Data1 Shield
8	TMDS Data1–
9	TMDS Data0+
10	TMDS Data0 Shield
11	TMDS Data0–
12	TMDS Clock+
13	TMDS Clock Shield
14	TMDS Clock–
15	CEC
16	DDC/CEC Ground
17	SCL
18	SDA
19	+5V Power

MARK	DESCRIPTION	DATE	REVISED	APPROVED
ΔX				
ΔX				
ΔX				

REVISIONS

ANGLAR	±5°
L≤ 4	±0.2
4<L≤ 16	±0.3
16<L≤ 63	±0.4
L> 63	±0.5

UNSPECIFIED TOLERANCES

DSND		SCALE: N/A
DWN		VIEW:
CHKD		UNIT: mm/in
APPD		SIZE: A4

MODEL TYPE: HDMI CONNECTOR

PART NO.: A73-01H3-1X1N2

DWG NO.: A73-01H3-1X1N2

XKB INDUSTRIAL PRECISION CO.,LIMITED

WEIGHT	SHEET	REVISION
	1/1	A0