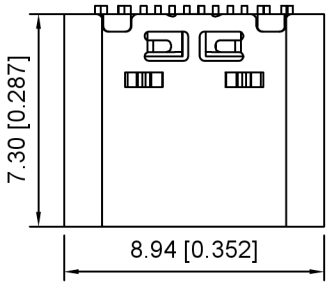

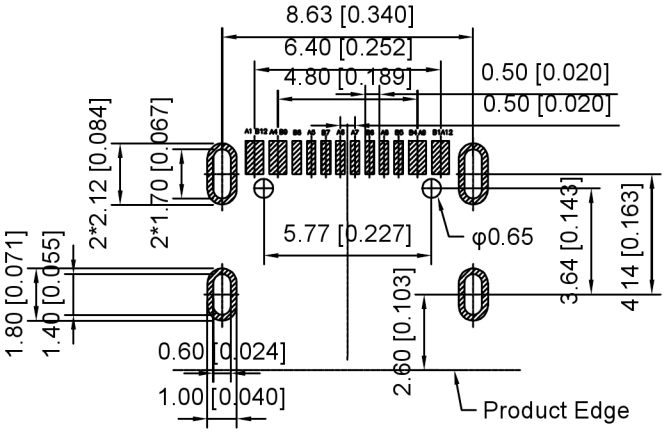

RECOMMENDED P.C.B LAYOUT
TOLERANCE UNSPECIFIED ±0.05mm

Material
Housing Material: High temperature thermoplastic. UL94V-0, Black
Contact Terminal: Copper Alloy
Metallic Shell: Stainless Steel
Inner Ground Cover Shell: Stainless Steel
Plating
Data Contact
Underplating: 50μ" Min. Nickel
Contact Plating: Gold Flash
Solder Area: 80μ" Matte Tin
Shell
Metallic Shell: 50μ" Min. Nickel
Electrical
Voltage Rating: 20V DC
Current Rating: Vbus pins collectively 3.00A, GND pins collectively 4.25A, B5 pin 1.25A, Other pins 0.25A per pin
Contact Resistance: 40mΩ Max Initial 50mΩ Max after test
Insulation resistance: 100 MΩ min.
Dielectric withstanding voltage: 100V AC/Minute
Mechanical
Durability: 3,000 cycles
Mating Force: 5 to 20N
Unmating Force: 6 to 20N after test
Environmental and Processing
Operating Temperature: -40°C to +85°C

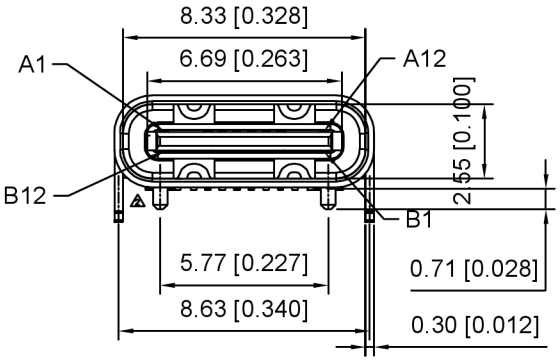

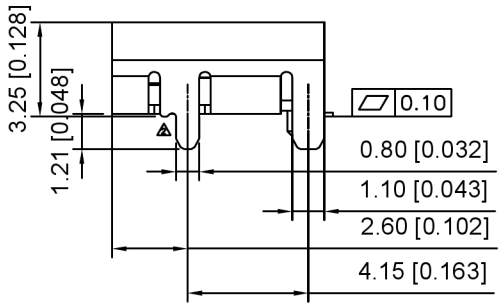

A1	GND	B12	GND
A4	VBUS	B9	VBUS
A5	CC1	B8	SBU2
A6	DP1	A7	DN2
A7	DN1	A6	DP2
A8	SBU1	A5	CC2
A9	VBUS	A4	VBUS
A12	GND	A1	GND
PIN	SIGNAL NAME	PIN	SIGNAL NAME

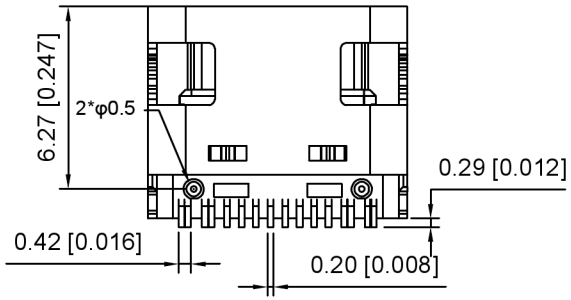

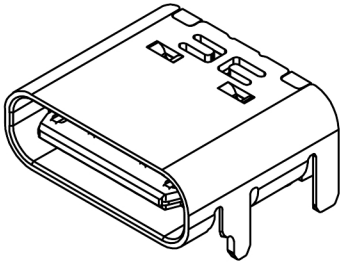

U262-16XN-4BVC11

1:AU 1U"
2:AU 3U"
5:AU 15U"
6:AU 30U"

广东星坤科技股份有限公司
文件工程章

MARK	DESCRIPTION	DATE	REVISED	APPROVED
处数	日期			

REVISIONS

www.helloxkb.com www.helloxkb.cn www.xk-dg.cn

UNSPECIFIED TOLERANCES	
ANGLAR	±5°
L≤ 4	±0.2
4<L≤ 16	±0.3
16<L≤ 63	±0.4
L> 63	±0.5

XKB INDUSTRIAL PRECISION CO.,LIMITED

DSND		SCALE: N/A	MODEL TYPE: Type-C 3.1
DWN		VIEW:	PART NO.:
CHKD		UNIT: mm/in	DWG NO.: U262-16XN-4BVC11
APPD		SIZE: A4	

WEIGHT	SHEET	REVISIC
	1/1	A0