XKB Connecitty

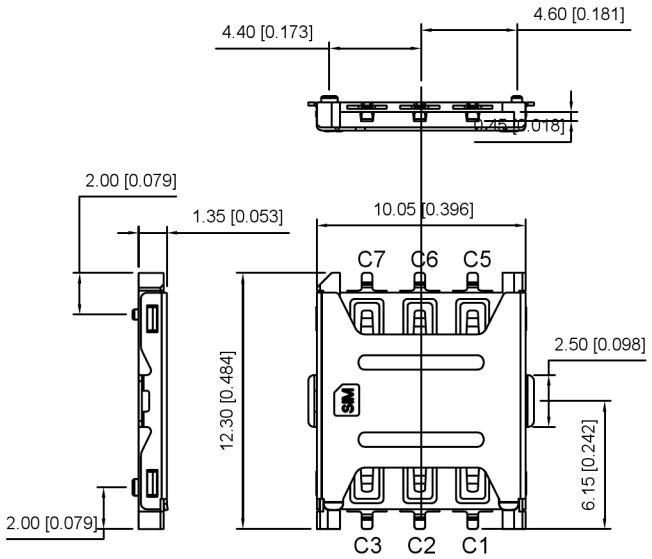

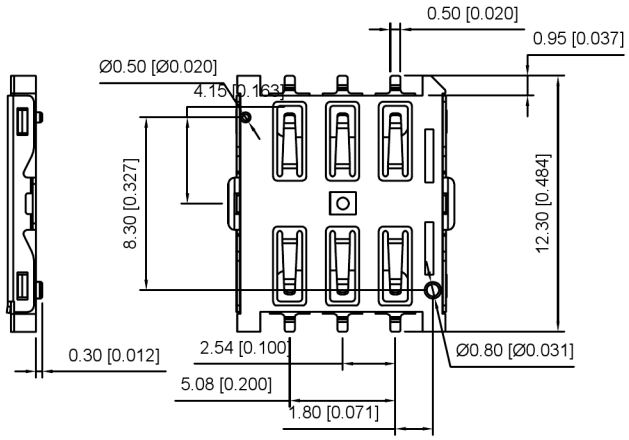

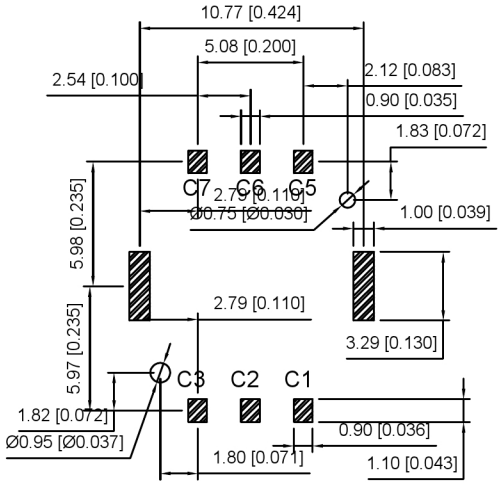

RECOMMEND P.C.B LAYOUT
(General tolerance ±0.05)

XKB Connecitty

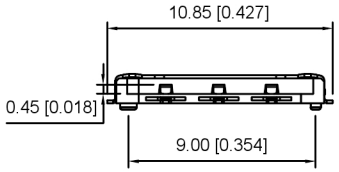

XKB Connecitty

SIM pin assignment	
PIN#	Name
C1	VCC供电电压
C2	RST重置
C3	CLK时钟
C5	GND接地
C6	VPP程序电压
C7	I/O输入输出

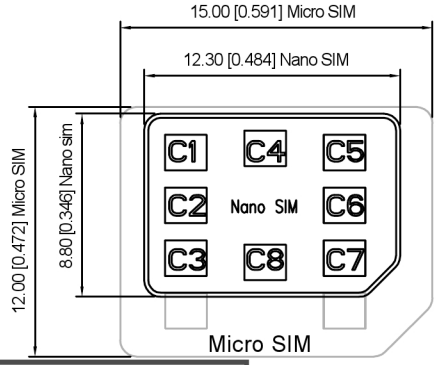

XKB Connecitty

Specification

材料 MATERIAL:
- 绝缘材料 Insulator: High Temperature Thermoplastic, UL 94V-0.
- 触点 Contact:C5210
- 外壳 SHELL:SUS

电镀 PLATING:
- 触点 Contact:Plated 50u"Ni Overall Contact ALL Au 1U,
- 外壳 Shell:Plated 50u"Ni Overall,PAD Au 1U

电气 Electrical:
- 额定电流 Current Rating :0.5mA AC/DC max.
- 额定电压 Voltage Rating :125V AC/DC
- 环境温度 Ambient Temperature Range :-20°C+60°C
- 储存温度 Storage Temperature Range :-40°C+70°C
- 环境湿度 Ambient Humidity Range :95% R.H. Max.
- 接触电阻 Contact Resistance:100mΩ max.
- 绝缘电阻 Insulation Resistance:1000MΩmin./500VDC
- 无通电寿命 Mating Cycles:10,000 Insertions
- 回流峰值温度 Reflow peak temp.:260°C ±5°C，3~5 S
- 通电寿命 Mating Cycles:3,000 Insertions Min

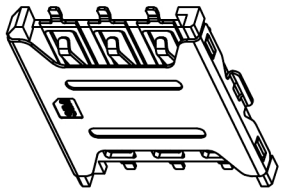

广东星坤科技股份有限公司
文件工程章

MARK	DESCRIPTION	DATE	REVISED	APPROVED

REVISIONS

UNSPECIFIED TOLERANCES	
ANGLAR	±5°
L≤ 4	±0.2
4<L≤ 16	±0.3
16<L≤ 63	±0.4
L> 63	±0.5

www.helloxkb.com www.helloxkb.cn www.xk-dg.cn

XKB INDUSTRIAL PRECISION CO.,LIMITED

DSND		SCALE: N/A	MODEL TYPE: SIM CARD CONN
DWN		VIEW:	PART NO.:
CHKD		UNIT: mm/in	DWG NO.: XKNANO-1151
APPD		SIZE: A4	

WEIGHT	SHEET	REVISIC
	1/1	A0